STB75N20
STP75N20 - STW75N20

N-channel 200V - 0.028Ω - 75A - D²PAK - TO-220 - TO-247
Low gate charge STripFET™ Power MOSFET

General features

Type	V_{DSS}	$R_{DS(on)}$	I_D
STB75N20	200V	<0.034Ω	75A
STP75N20	200V	<0.034Ω	75A
STW75N20	200V	<0.034Ω	75A

- Exceptional dv/dt capability
- Low gate charge
- 100% Avalanche tested

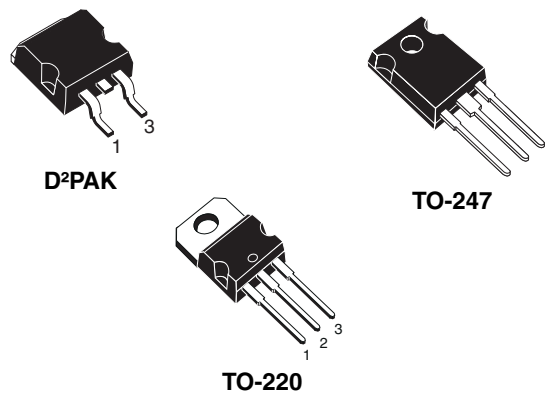

Description

This Power MOSFET series realized with STMicroelectronics unique STripFET™ process has specifically been designed to minimize input capacitance and gate charge. It is therefore suitable as primary switch in advanced high-efficiency isolated DC-DC converters

Applications

- Switching application

Internal schematic diagram

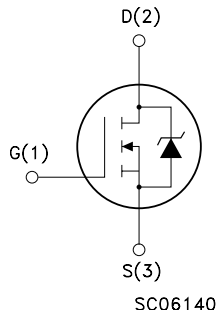

Order codes

Part number	Marking	Package	Packaging
STB75N20T4	B75N20	D²PAK	Tape & reel
STP75N20	P75N20	TO-220	Tube
STW75N20	W75N20	TO-247	Tube

Contents

1 Electrical ratings 3

2 Electrical characteristics 4

2.1 Electrical characteristics (curves) 6

3 Test circuit 9

4 Package mechanical data 10

5 Packaging mechanical data 12

6 Revision history 13

1 Electrical ratings

Table 1. Absolute maximum ratings

Symbol	Parameter	Value	Unit
V_{DS}	Drain-source voltage (V_{GS} = 0)	200	V
V_{DGR}	Drain-gate voltage (R_{GS} = 20 kΩ)	200	V
V_{GS}	Gate-source voltage	± 20	V
I_D	Drain current (continuous) at T_C = 25°C	75	A
I_D	Drain current (continuous) at T_C = 100°C	47	A
I_{DM}(1)	Drain current (pulsed)	300	A
	Derating factor	1.52	
P_{TOT}	Total dissipation at T_C = 25°C	190	W
T_J Tstg	Operating junction temperature Storage temperture	-50 to 150	°C

1. $I_{SD} \leq$ 20A, di/dt $\leq$ 100A/µs, V_{DD} = 80% $V_{(BR)DSS}$

Table 2. Thermal resistance

Symbol	Parameter	Value		Unit
		TO-220/D²PAK	TO-247	
R_{thJC}	Thermal resistance junction-case Max	0.66		°C/W
$R_{thJ\text{-}pcb}$ (1)	Thermal resistance junction-pcb Max	34	--	°C/W
R_{thJA}	Thermal resistance junction-ambient Max	62.5	40	°C/W
T_l	Maximum lead temperature for soldering purpose	300		°C

1. When mounted on inch²FR-4 board (t $\leq$ 10µs)

Table 3. Avalanche characteristics

Symbol	Parameter	Max value	Unit
I_{AR}	Avalanche current, repetitive or not-repetitive (pulse width limited by T_J max)	37	A
E_{AS}	Single pulse avalanche energy (starting T_J= 25°C, Id= Iar, Vdd=50V)	205	mJ

2 Electrical characteristics

(T_{CASE}=25°C unless otherwise specified)

Table 4. On/off states

Symbol	Parameter	Test conditions	Min.	Typ.	Max.	Unit
$V_{(BR)DSS}$	Drain-source breakdown voltage	I_D = 1mA, V_{GS}= 0	200			V
I_{DSS}	Zero gate voltage drain current (V_{GS} = 0)	V_{DS} = Max rating, V_{DS} = Max rating @125°C			1 10	µA µA
I_{GSS}	Gate body leakage current (V_{DS} = 0)	V_{DS} = ± 20V			±100	nA
$V_{GS(th)}$	Gate threshold voltage	V_{DS}= V_{GS}, I_D = 250µA	2	3	4	V
$R_{DS(on)}$	Static drain-source on resistance	V_{GS}= 10V, I_D= 37A		0.028	0.034	Ω

Table 5. Dynamic

Symbol	Parameter	Test conditions	Min.	Typ.	Max.	Unit
g_{fs}(1)	Forward transconductance	V_{DS} = 15V, I_D= 37A		40		S
C_{iss} C_{oss} C_{rss}	Input capacitance Output capacitance Reverse Transfer Capacitance	V_{DS} = 25V, f = 1 MHz, V_{GS} =0		3260 640 110		pF pF pF
Q_g Q_{gs} Q_{gd}	Total gate charge Gate-source charge Gate-drain charge	V_{DD}= 160V, I_D=75A, V_{GS}= 10V (see Figure 16)		84 18 34		nC nC nC

1. Pulsed: pulse duration = 300µs, duty cycle 1.5%

Table 6. Switching times

Symbol	Parameter	Test conditions	Min.	Typ.	Max.	Unit
$t_{d(on)}$ t_r $t_{d(off)}$ t_f	Turn-on delay time Rise time Turn-off delay time Fall time	V_{DD} = 100V, I_D = 37A R_G= 4.7Ω, V_{GS}= 10V, (see Figure 15)		53 33 75 29		ns ns ns ns

Table 7. Source drain diode

Symbol	Parameter	Test conditions	Min	Typ.	Max	Unit
I_{SD} I_{SDM}(1)	Source-drain current Source-drain current (pulsed)				75 300	A A
V_{SD}(2)	Forward on voltage	I_{SD} = 75A, V_{GS} = 0			1.6	V
t_{rr} Q_{rr} I_{RRM}	Reverse recovery time Reverse recovery charge Reverse recovery current	I_{SD} = 75A,V_{DD} = 100V di/dt = 100 A/µs T_j = 25°C (see Figure 20)		222 2.18 19		ns µC A
t_{rr} Q_{rr} I_{RRM}	Reverse recovery time Reverse recovery charge Reverse recovery current	I_{SD} = 75A, V_{DD} = 100V di/dt = 100 A/µs T_j = 150°C (see Figure 20)		267 3 22		ns µC A

1. Pulse with limited by maximum temperature
2. Pulsed: pulse duration = 300µs, duty cycle 1.5%

2.1 Electrical characteristics (curves)

Figure 1. Safe operating area for TO-220 / D²PAK

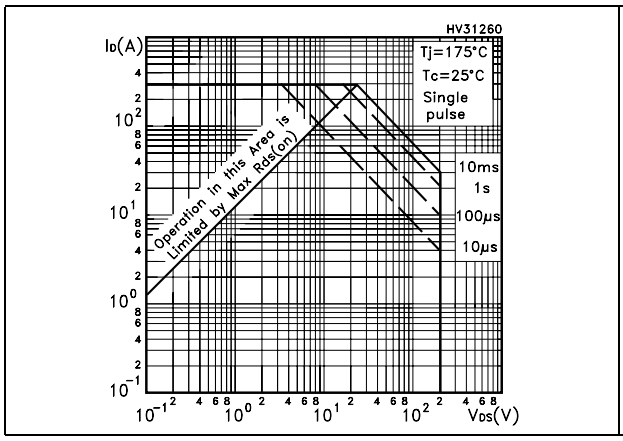

Figure 2. Thermal impedance for TO-220 / D²PAK

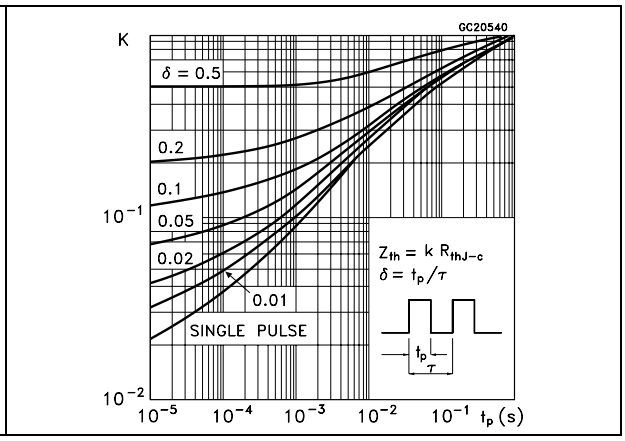

Figure 3. Safe operating area for TO-247

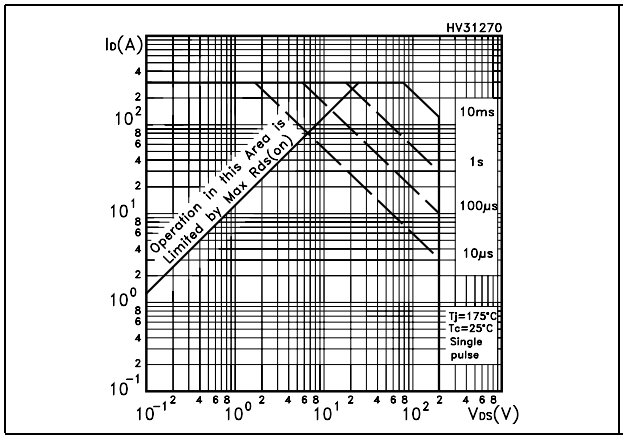

Figure 4. Thermal impedance for TO-247

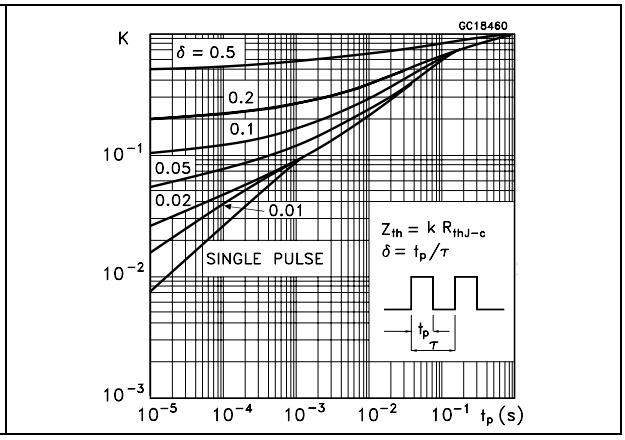

Figure 5. Output characterisics

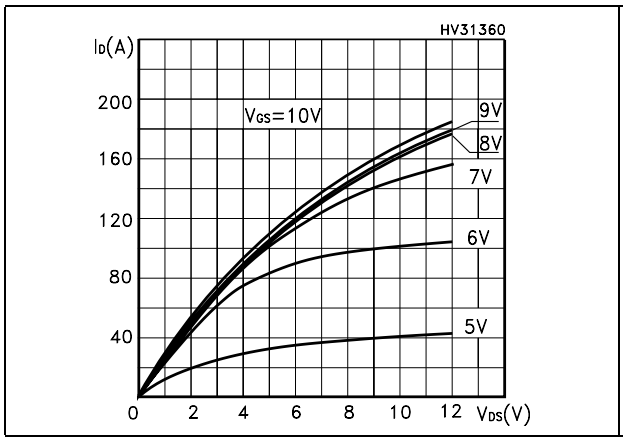

Figure 6. Transfer characteristics

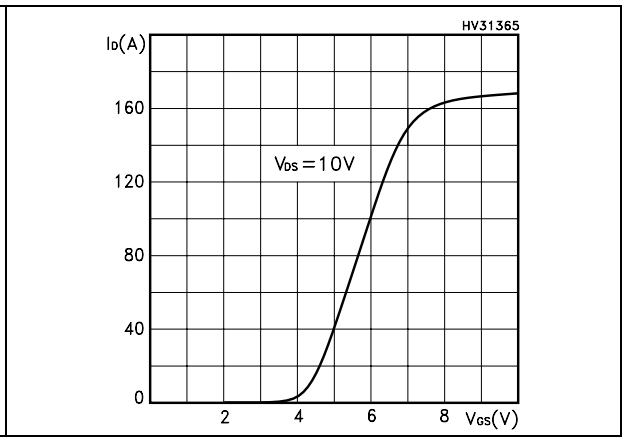

Figure 7. Normalized B_{VDSS} vs temperature

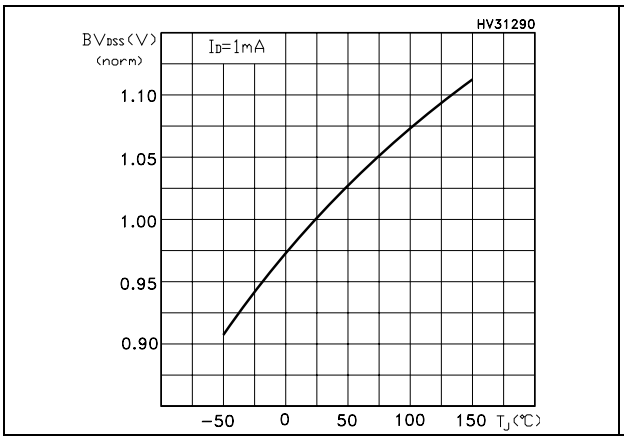

Figure 8. Static drain-source on resistance

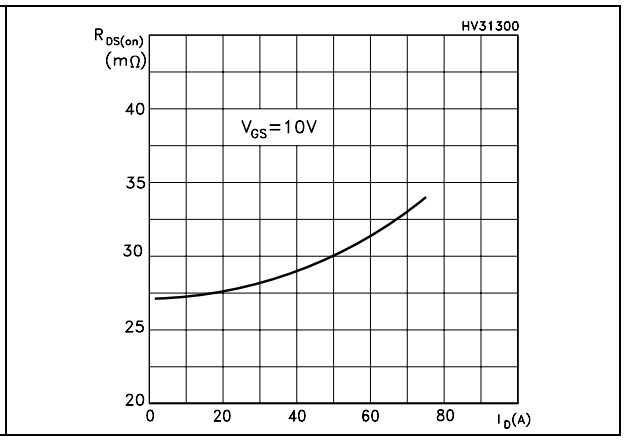

Figure 9. Gate charge vs gate-source voltage

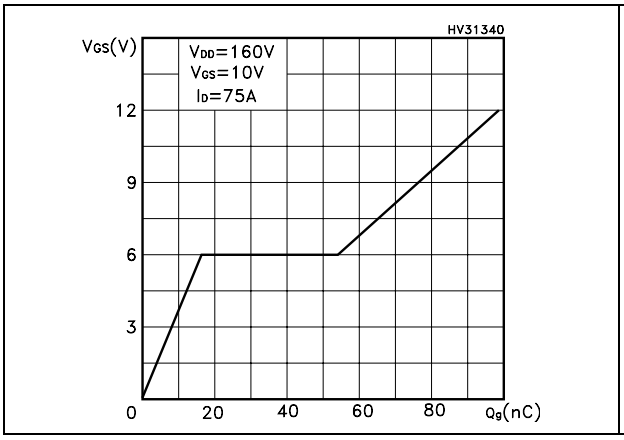

Figure 10. Capacitance variations

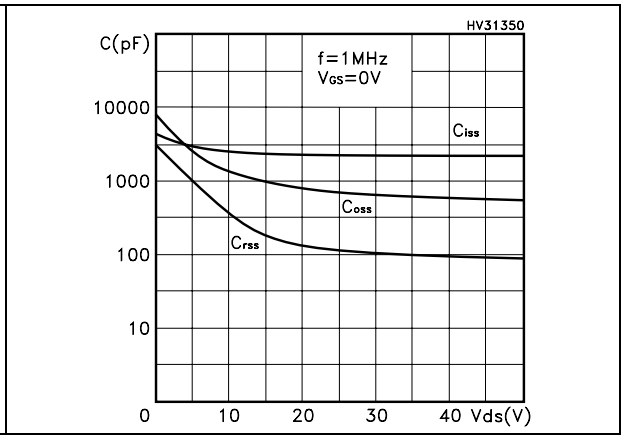

Figure 11. Normalized gate threshold voltage vs temperature

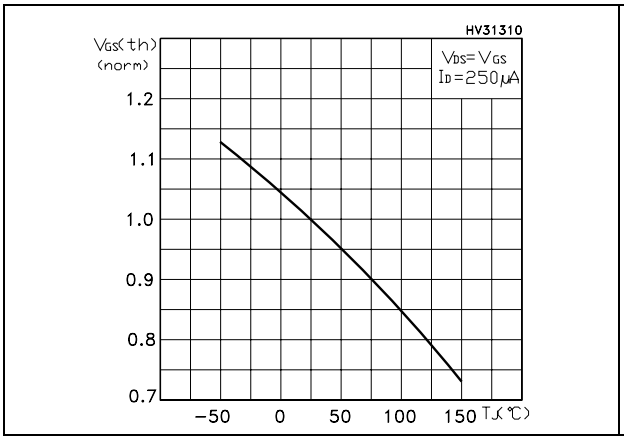

Figure 12. Normalized on resistance vs temperature

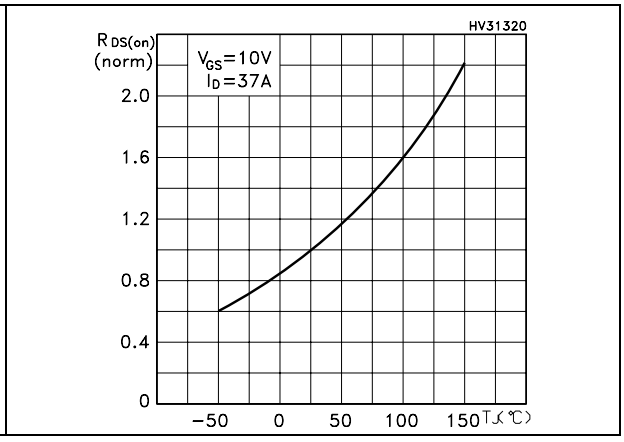

Figure 13. Source-drain diode forward characteristics

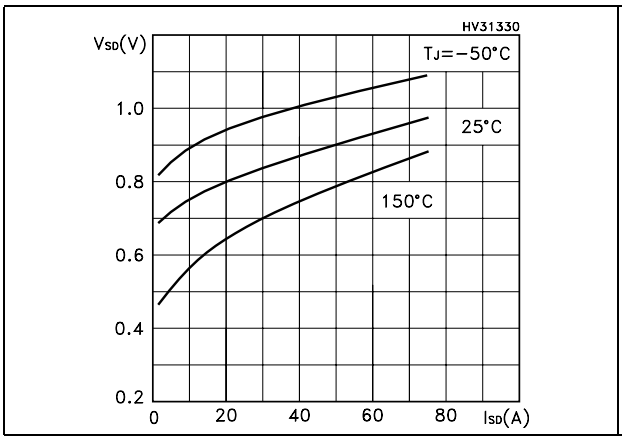

Figure 14. Avalanche energy vs starting Tj

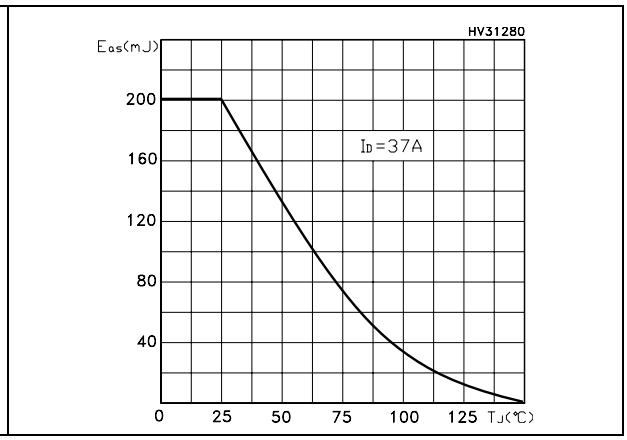

3 Test circuit

Figure 15. Switching times test circuit for resistive load

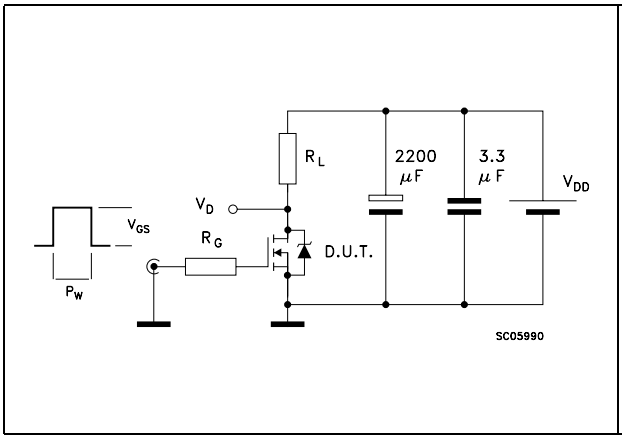

Figure 16. Gate charge test circuit

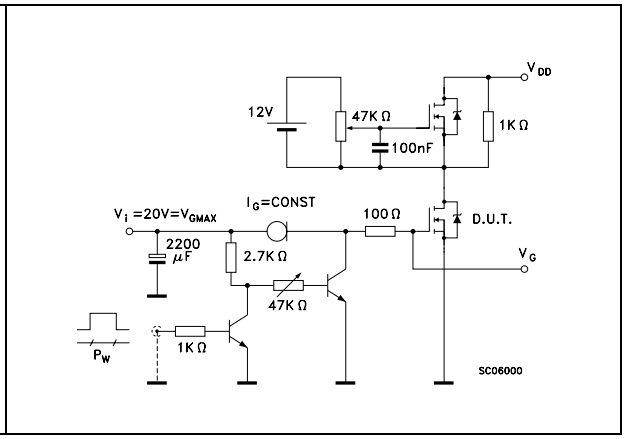

Figure 17. Test circuit for inductive load switching and diode recovery times

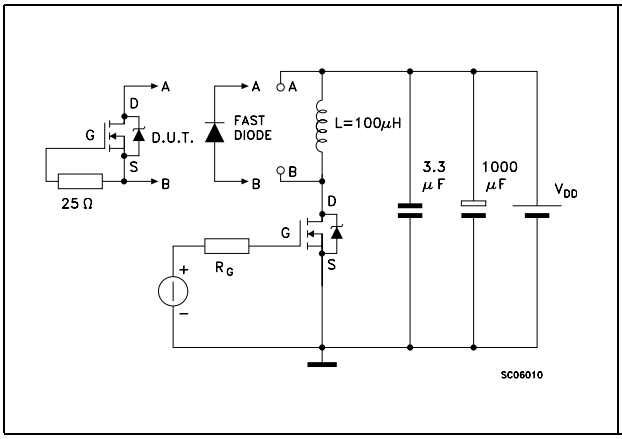

Figure 18. Unclamped inductive load test circuit

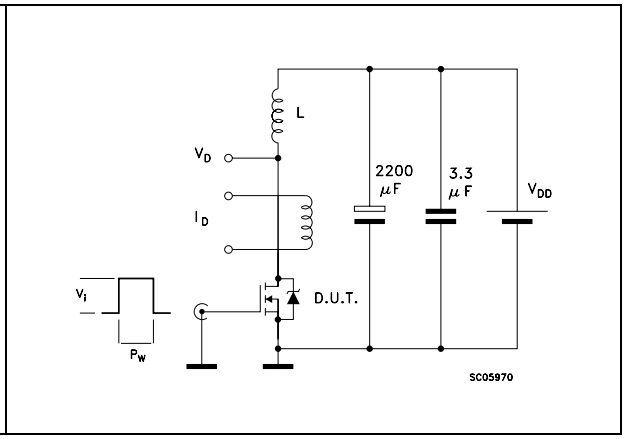

Figure 19. Unclamped inductive waveform

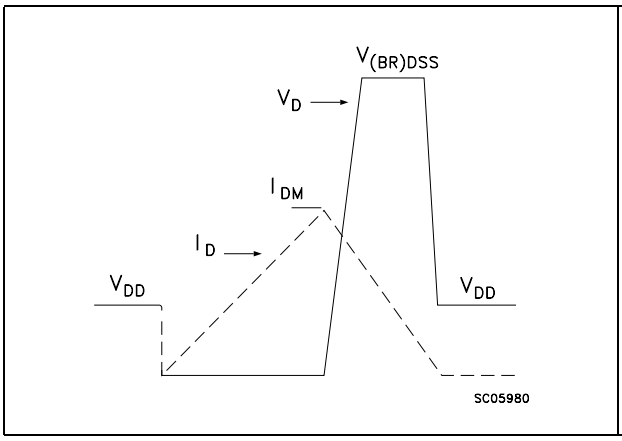

Figure 20. Switching time waveform

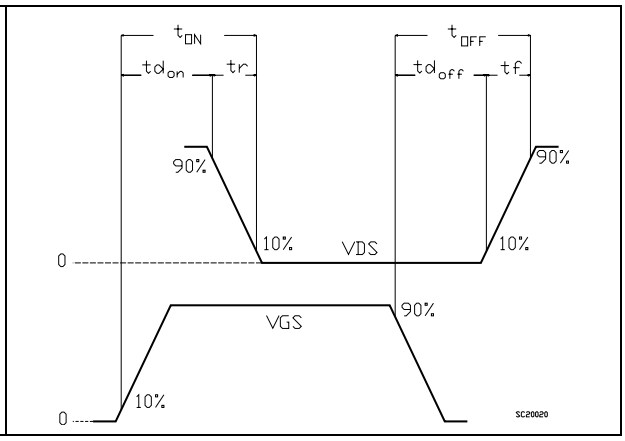

4 Package mechanical data

In order to meet environmental requirements, ST offers these devices in ECOPACK® packages. These packages have a Lead-free second level interconnect . The category of second level interconnect is marked on the package and on the inner box label, in compliance with JEDEC Standard JESD97. The maximum ratings related to soldering conditions are also marked on the inner box label. ECOPACK is an ST trademark. ECOPACK specifications are available at: www.st.com

TO-220 MECHANICAL DATA

DIM.	mm.			inch		
	MIN.	TYP	MAX.	MIN.	TYP.	MAX.
A	4.40		4.60	0.173		0.181
b	0.61		0.88	0.024		0.034
b1	1.15		1.70	0.045		0.066
c	0.49		0.70	0.019		0.027
D	15.25		15.75	0.60		0.620
E	10		10.40	0.393		0.409
e	2.40		2.70	0.094		0.106
e1	4.95		5.15	0.194		0.202
F	1.23		1.32	0.048		0.052
H1	6.20		6.60	0.244		0.256
J1	2.40		2.72	0.094		0.107
L	13		14	0.511		0.551
L1	3.50		3.93	0.137		0.154
L20		16.40			0.645	
L30		28.90			1.137	
øP	3.75		3.85	0.147		0.151
Q	2.65		2.95	0.104		0.116

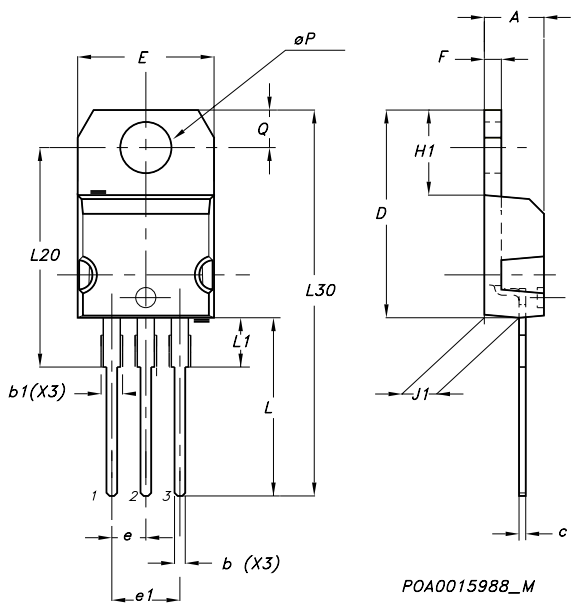

TO-247 MECHANICAL DATA

DIM.	mm.			inch		
	MIN.	TYP	MAX.	MIN.	TYP.	MAX.
A	4.85		5.15	0.19		0.20
A1	2.20		2.60	0.086		0.102
b	1.0		1.40	0.039		0.055
b1	2.0		2.40	0.079		0.094
b2	3.0		3.40	0.118		0.134
c	0.40		0.80	0.015		0.03
D	19.85		20.15	0.781		0.793
E	15.45		15.75	0.608		0.620
e		5.45			0.214	
L	14.20		14.80	0.560		0.582
L1	3.70		4.30	0.14		0.17
L2		18.50			0.728	
øP	3.55		3.65	0.140		0.143
øR	4.50		5.50	0.177		0.216
S		5.50			0.216	

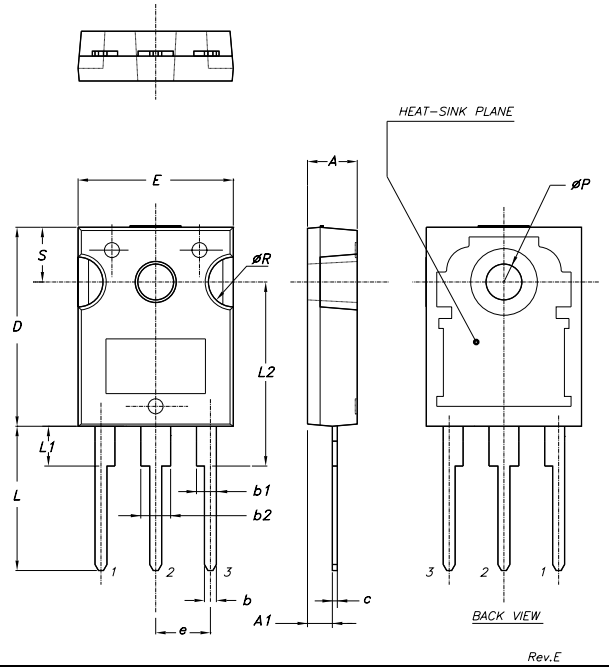

D^2PAK MECHANICAL DATA

DIM.	mm.			inch		
	MIN.	TYP	MAX.	MIN.	TYP.	MAX.
A	4.4		4.6	0.173		0.181
A1	2.49		2.69	0.098		0.106
A2	0.03		0.23	0.001		0.009
B	0.7		0.93	0.027		0.036
B2	1.14		1.7	0.044		0.067
C	0.45		0.6	0.017		0.023
C2	1.23		1.36	0.048		0.053
D	8.95		9.35	0.352		0.368
D1		8			0.315	
E	10		10.4	0.393		
E1		8.5			0.334	
G	4.88		5.28	0.192		0.208
L	15		15.85	0.590		0.625
L2	1.27		1.4	0.050		0.055
L3	1.4		1.75	0.055		0.068
M	2.4		3.2	0.094		0.126
R		0.4			0.015	
V2	0º		4º			

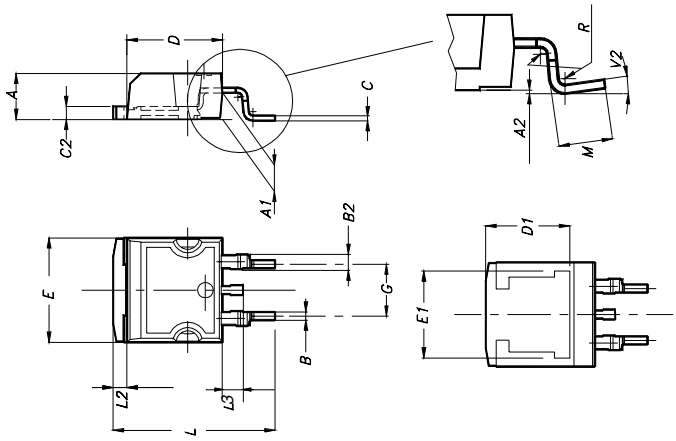

5 Packaging mechanical data

D²PAK FOOTPRINT

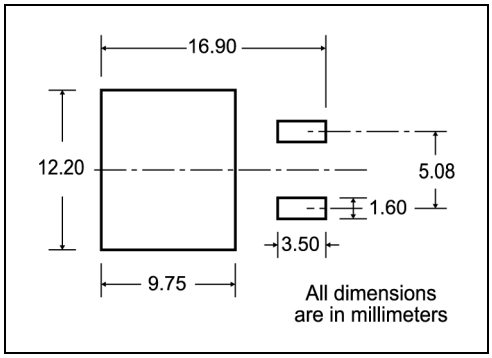

TAPE AND REEL SHIPMENT

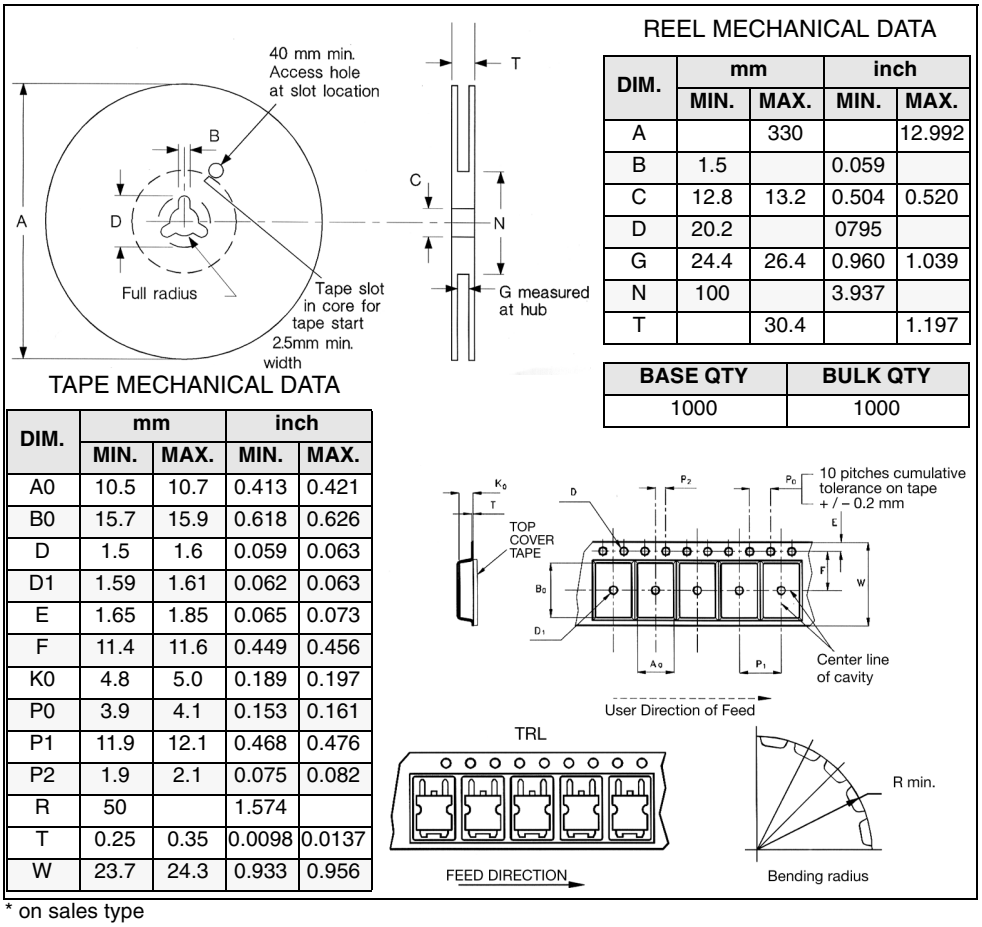

REEL MECHANICAL DATA

DIM.	mm		inch	
	MIN.	MAX.	MIN.	MAX.
A		330		12.992
B	1.5		0.059	
C	12.8	13.2	0.504	0.520
D	20.2		0795	
G	24.4	26.4	0.960	1.039
N	100		3.937	
T		30.4		1.197

BASE QTY	BULK QTY
1000	1000

TAPE MECHANICAL DATA

DIM.	mm		inch	
	MIN.	MAX.	MIN.	MAX.
A0	10.5	10.7	0.413	0.421
B0	15.7	15.9	0.618	0.626
D	1.5	1.6	0.059	0.063
D1	1.59	1.61	0.062	0.063
E	1.65	1.85	0.065	0.073
F	11.4	11.6	0.449	0.456
K0	4.8	5.0	0.189	0.197
P0	3.9	4.1	0.153	0.161
P1	11.9	12.1	0.468	0.476
P2	1.9	2.1	0.075	0.082
R	50		1.574	
T	0.25	0.35	0.0098	0.0137
W	23.7	24.3	0.933	0.956

* on sales type

6 Revision history

Table 8. Revision history

Date	Revision	Changes
08-May-2005	1	First release
28-Mar-2006	2	Preliminary version
19-May-2006	3	Complete version with curves
19-Jul-2006	4	New template, no content change

Please Read Carefully:

Information in this document is provided solely in connection with ST products. STMicroelectronics NV and its subsidiaries (“ST”) reserve the right to make changes, corrections, modifications or improvements, to this document, and the products and services described herein at any time, without notice.

All ST products are sold pursuant to ST’s terms and conditions of sale.

Purchasers are solely responsible for the choice, selection and use of the ST products and services described herein, and ST assumes no liability whatsoever relating to the choice, selection or use of the ST products and services described herein.

No license, express or implied, by estoppel or otherwise, to any intellectual property rights is granted under this document. If any part of this document refers to any third party products or services it shall not be deemed a license grant by ST for the use of such third party products or services, or any intellectual property contained therein or considered as a warranty covering the use in any manner whatsoever of such third party products or services or any intellectual property contained therein.

UNLESS OTHERWISE SET FORTH IN ST’S TERMS AND CONDITIONS OF SALE ST DISCLAIMS ANY EXPRESS OR IMPLIED WARRANTY WITH RESPECT TO THE USE AND/OR SALE OF ST PRODUCTS INCLUDING WITHOUT LIMITATION IMPLIED WARRANTIES OF MERCHANTABILITY, FITNESS FOR A PARTICULAR PURPOSE (AND THEIR EQUIVALENTS UNDER THE LAWS OF ANY JURISDICTION), OR INFRINGEMENT OF ANY PATENT, COPYRIGHT OR OTHER INTELLECTUAL PROPERTY RIGHT.

UNLESS EXPRESSLY APPROVED IN WRITING BY AN AUTHORIZED ST REPRESENTATIVE, ST PRODUCTS ARE NOT RECOMMENDED, AUTHORIZED OR WARRANTED FOR USE IN MILITARY, AIR CRAFT, SPACE, LIFE SAVING, OR LIFE SUSTAINING APPLICATIONS, NOR IN PRODUCTS OR SYSTEMS WHERE FAILURE OR MALFUNCTION MAY RESULT IN PERSONAL INJURY, DEATH, OR SEVERE PROPERTY OR ENVIRONMENTAL DAMAGE. ST PRODUCTS WHICH ARE NOT SPECIFIED AS "AUTOMOTIVE GRADE" MAY ONLY BE USED IN AUTOMOTIVE APPLICATIONS AT USER’S OWN RISK.

Resale of ST products with provisions different from the statements and/or technical features set forth in this document shall immediately void any warranty granted by ST for the ST product or service described herein and shall not create or extend in any manner whatsoever, any liability of ST.

ST and the ST logo are trademarks or registered trademarks of ST in various countries.

Information in this document supersedes and replaces all information previously supplied.

The ST logo is a registered trademark of STMicroelectronics. All other names are the property of their respective owners.

© 2006 STMicroelectronics - All rights reserved

STMicroelectronics group of companies

Australia - Belgium - Brazil - Canada - China - Czech Republic - Finland - France - Germany - Hong Kong - India - Israel - Italy - Japan - Malaysia - Malta - Morocco - Singapore - Spain - Sweden - Switzerland - United Kingdom - United States of America

www.st.com